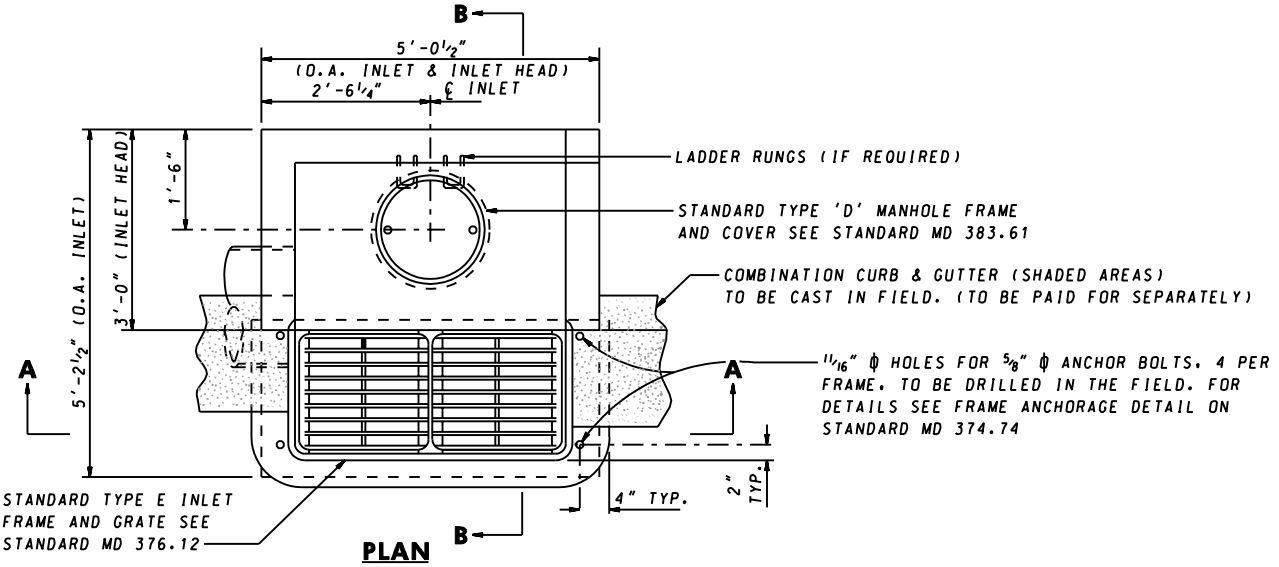

PLAN

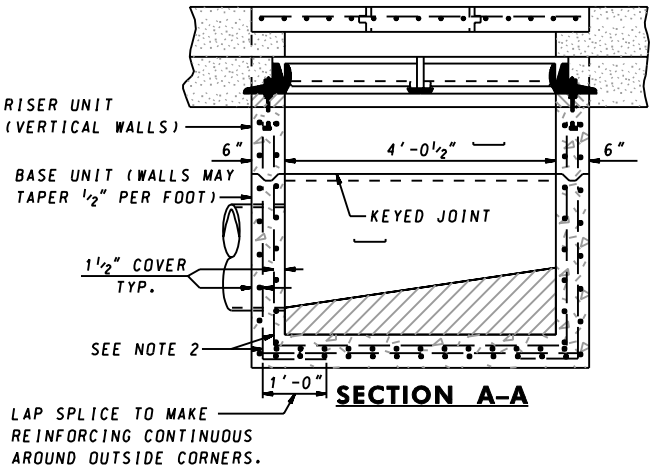

SECTION A–A

GENERAL NOTES

1. CONCRETE TO BE MIX NO.6 (4500 PSI).
2. REINFORCING-2 LAYERS OF 4x4-W4.0xW4.0 WELDED WIRE FABRIC.
3. THREADED PLASTIC INSERTS TO BE PROVIDED FOR HANDING.
4. GRADE AND SLOPE ADJUSTMENTS TO BE COMPLETED IN THE FIELD USING CONCRETE MIX NO.6.
5. PIPE OPENINGS TO BE PROVIDED AS REQUIRED. FOR SIZE, LOCATION, AND INVERT ELEVATIONS REFER TO THE PLANS.
6. PLACEMENT OF SUBGRADE DRAINAGE WILL BE AS DIRECTED BY THE ENGINEER OR AS NOTED ON THE PLANS.
7. LADDER RUNGS SHALL BE IN ACCORDANCE WITH STANDARDS MD 383.91 AND MD 383.92 OR AS DIRECTED BY THE ENGINEER.
8. "MINIMUM DEPTH" PAYMENT PER EACH INLET FOR DEPTHS UP TO 3'-6". VERTICAL DEPTH PAYMENT PER LINEAR FOOT FOR DEPTHS IN EXCESS OF 3'-6".

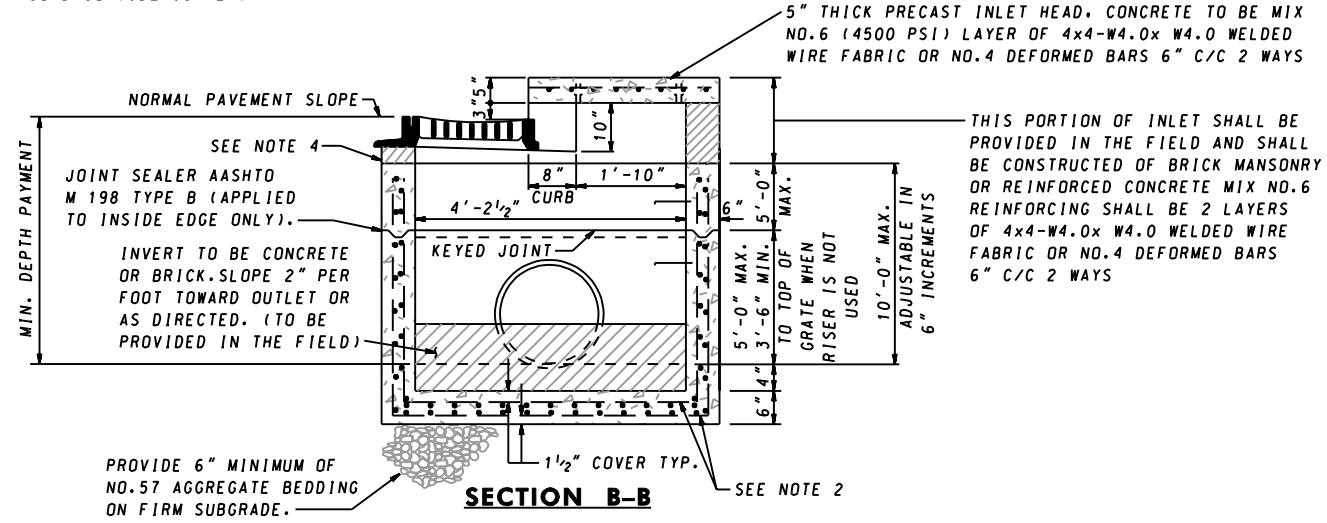

SECTION B–B

SPECIFICATION 305	CATEGORY CODE ITEMS
APPROVED	Kirk G. McClelland DIRECTOR – OFFICE OF HIGHWAY DEVELOPMENT

SHA State Highway Administration	APPROVAL • SHA REVISIONS	APPROVAL • FEDERAL HIGHWAY ADMINISTRATION
	APPROVAL 4-15-87	APPROVAL 6-23-87
	REVISED 10-1-01	REVISED
	REVISED	REVISED
	REVISED	REVISED

Maryland Department of Transportation
STATE HIGHWAY ADMINISTRATION

STANDARDS FOR HIGHWAYS AND INCIDENTAL STRUCTURES

PRECAST STANDARD
TYPE H COMBINATION INLET

STANDARD NO. MD 374.75